BORDOLESE 3 0.750



KMC GLASS

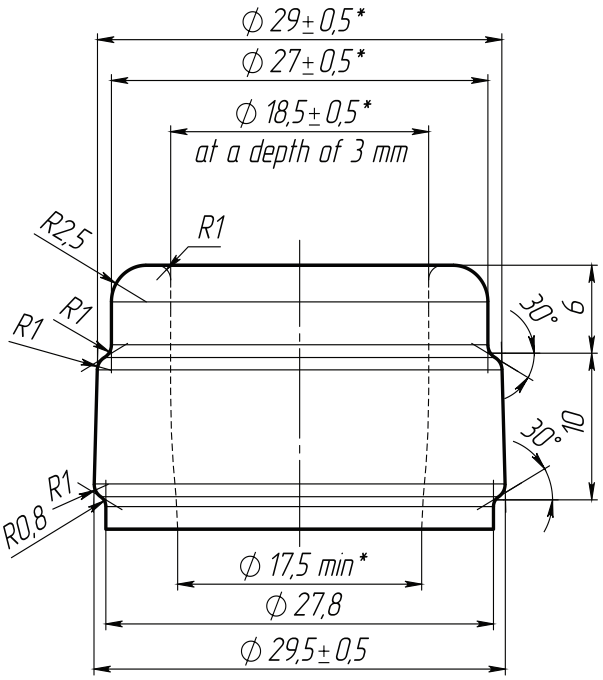

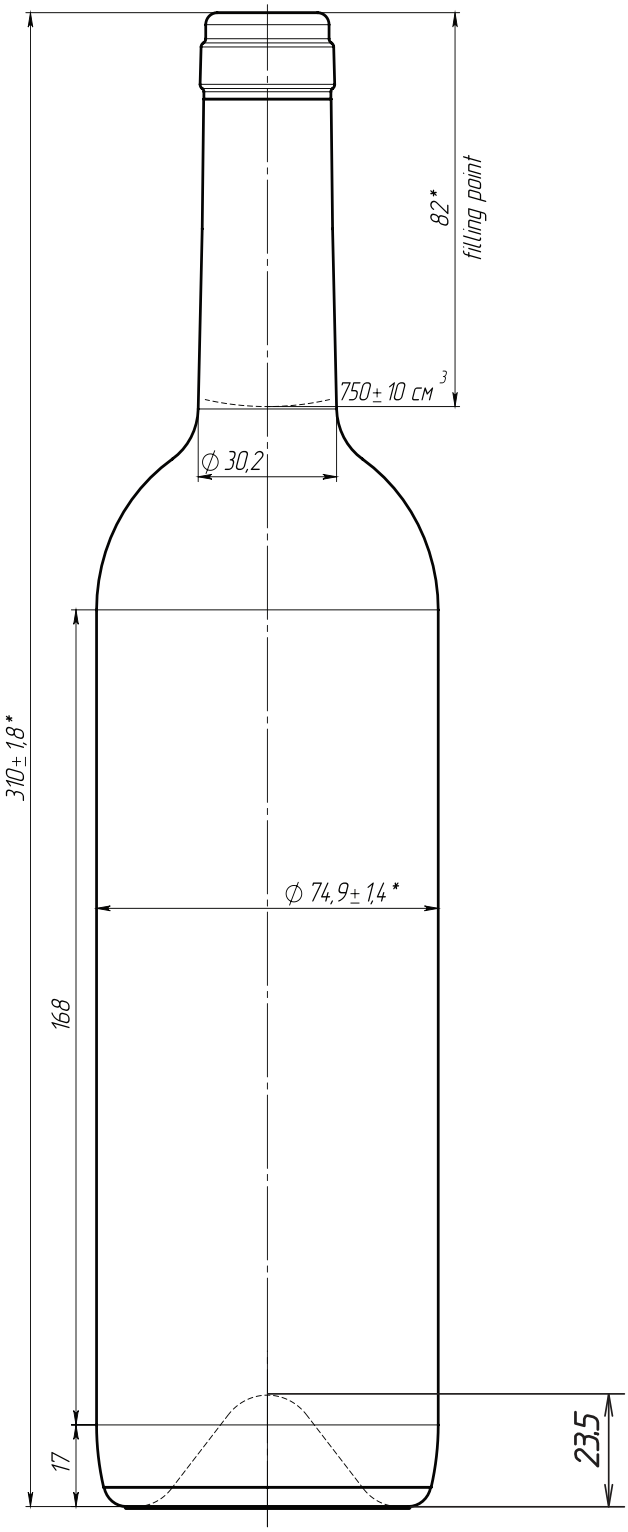

- Bordolese 3
- Filling CAP - 750 ml
- Weight - 455 g
- Height - 310±1.8 mm
- Diameter - 74.9±1.4 mm
- Entrance Bore Diameter - 18.5±0.5 mm
- Color - Olive Green

www.kmc.glass
sales@kmc.glass

KMC GLASS